LVDS0

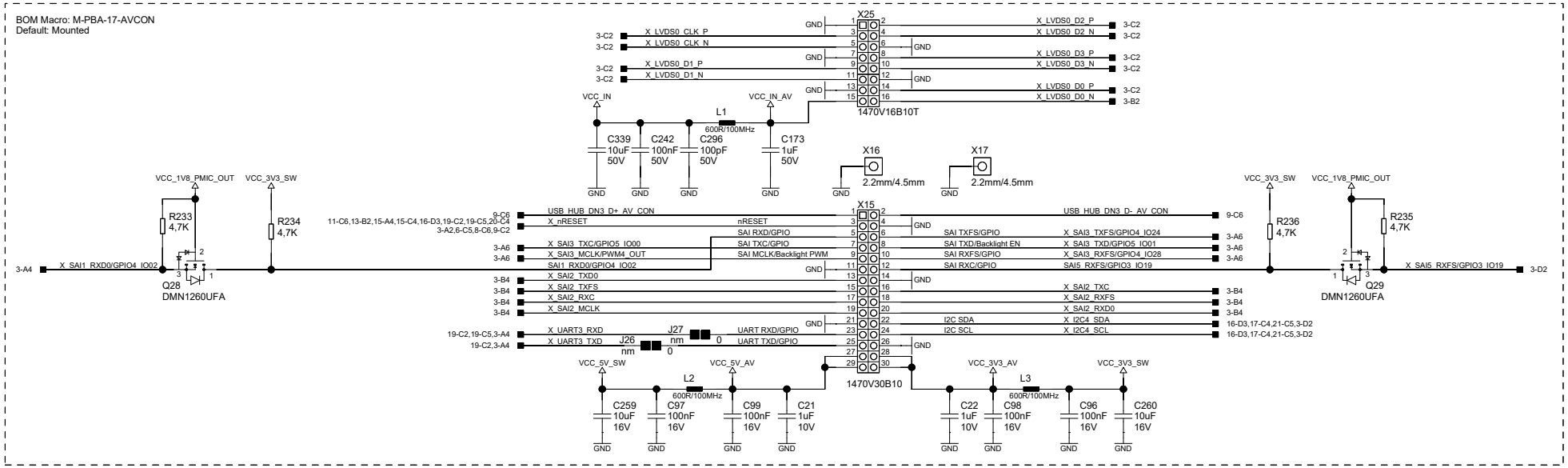

LVDS1

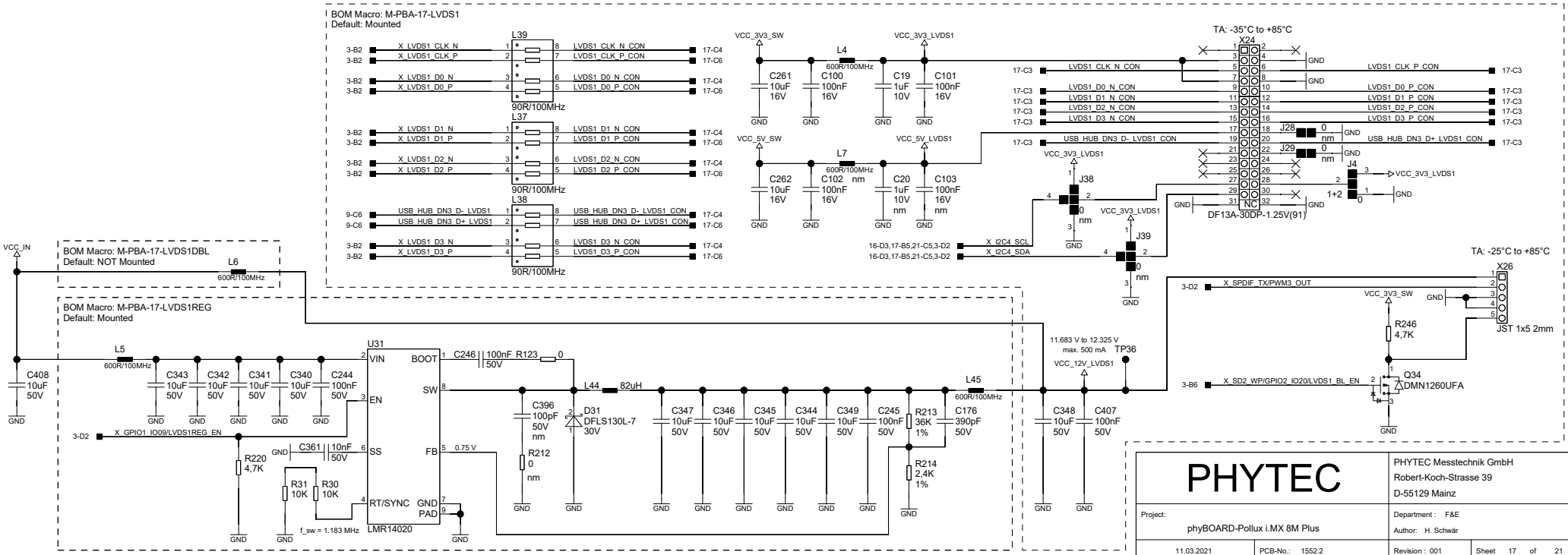

PHYTEC		PHYTEC Messtechnik GmbH Robert-Koch-Strasse 39 D-55129 Mainz	
Project: phyBOARD-Pollux i.MX 8M Plus		Department : F&E Author: H. Schwär	
11.03.2021	PCB-No.: 1552.2	Revision : 001	Sheet 17 of 21